# Dewpoint Transmitter

DPRC BACnet - Installation Instructions

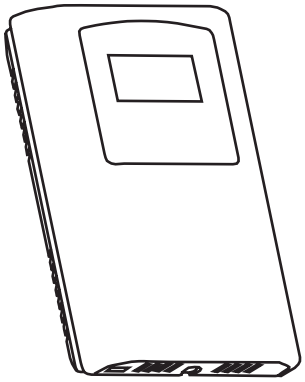

## INTRODUCTION

The dewpoint transmitters are designed for use in environmental monitoring and control systems where high performance and stability are demanded. It's state-of-the-art design combines digital linearization and temperature compensation with a highly accurate and reliable thermoset polymer based capacitance humidity sensor and curve-matched NTC thermistor temperature sensor for reliability and accuracy in the most critical applications. The dewpoint transmitter has four measurement variables which include dewpoint, dry-bulb temperature, wet-bulb temperature and enthalpy which are available BACnet signal to provide the most efficient monitoring and control solution.

## BEFORE INSTALLATION

Read these instructions carefully before installing and commissioning the device. Failure to follow these instructions may result in product damage. Do not use in an explosive or hazardous environment, with combustible or flammable gases, as a safety or emergency stop device or in any other application where failure of the product could result in personal injury. Take electrostatic discharge precautions during installation and do not exceed the device ratings.

## MOUNTING

The dewpoint transmitter installs directly on a standard electrical box and should be mounted five feet from the floor of the area to be controlled. Do not mount the sensor near doors, opening windows, supply air diffusers or other known air disturbances. Avoid areas where the detector is exposed to vibrations or rapid temperature changes.

The cover is hooked to the base at the top edge and must be removed from the bottom edge first. Use a small Phillips screwdriver to loosen the security screw as shown in Figure 1. (Complete removal of this screw is not required). Use a screwdriver to carefully pry each bottom corner if necessary. Tip the cover away from the base and sit it aside as shown in Figure 2.

The PCB must be removed from the base to access the mounting holes. Follow usual anti-static procedures when handling the PCB and be careful not to touch the sensors. The PCB is removed by pressing the enclosure base to unsnap the latch near the bottom edge, then the PCB can be lifted out of the base as shown in Figure 3.

Sit the PCB aside until the base is mounted on the wall. For added protection, place the PCB in the supplied anti-static bag.

Mount the base by screwing to an electrical box or directly to the wall as shown in Figure 4. The mounting hole locations are shown on page 3.

After the base is screwed to an electrical box or the wall using the appropriate holes, remove the PCB from the anti-static bag, feed connection wires through center hole and place the top of PCB into the PCB holders on backplate and snap bottom of PCB into place as shown in Figure 4.

Make wire connections as per the Wiring Illustrations on Page 2 and install decorative cover by placing the top of the cover into the cover holder on the top of the backplate and snapping the bottom into place as shown in Figure 4. Tighten security screw with a screwdriver.

Figure 1

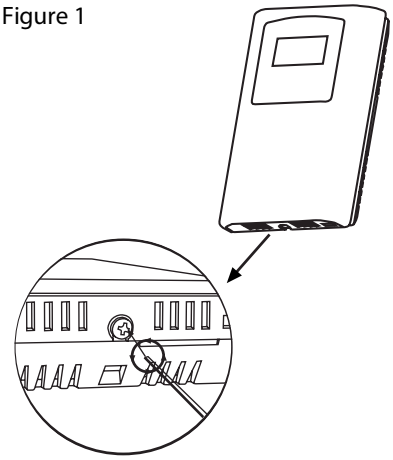

Figure 2

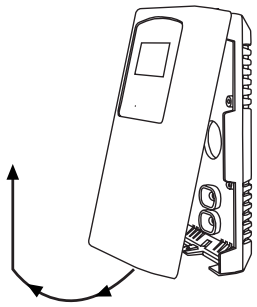

Figure 3

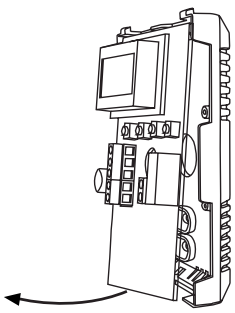

Figure 4

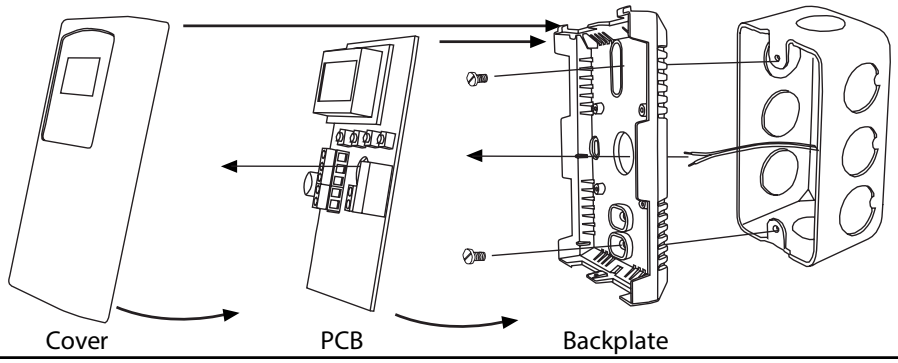



Copyright © Greystone Energy Systems, Inc. All Rights Reserved
Phone: +1 506 853 3057 Web: www.greystoneenergy.com

## WIRING

- Deactivate the 24 Vac/dc power supply until all connections are made to the device to prevent electrical shock or equipment damage.
- Follow proper electrostatic discharge (ESD) handling procedures when installing the device or equipment damage may occur.
- Use 22 AWG shielded wiring for all connections and do not locate the device wires in the same conduit with wiring used to supply inductive loads such as motors.
- Make all connections in accordance with national and local codes.

Connect the 24 Vac/dc power supply to the terminals labeled PWR (power) and COM (common) as shown in Figure 6. This device has a half-wave type power supply so use caution when wiring multiple devices so that the circuit ground point is the same on all devices and the controller. Use caution if 24 Vac power is used and one side of the transformer is earth-grounded. In general, the transformer should NOT be connected to earth ground when using devices with RS-485 network connections. The device is reverse voltage protected and will not operate if connected backwards.

Connect the RS-485 network with twisted shielded pair to the terminals marked A-, B+ and SHLD (shield) as shown in Figure 6. The positive wire connects to B(+) and the negative wire connects to A(-) and the cable shield must be connected to the SHLD terminal on each device. If the device is installed at either end of the network, an end-of-line (EOL) termination resistor (121 ohm) should be installed in parallel to the A(-) and B(+) terminals. This device includes a network termination jumper and will connect the resistor correctly on the pcb. Simply move the pcb jumper to the EOL position and no external resistor is required as shown in Figure 7. The ground wire of the shielded pair should be connected to earth ground at the end of the network and the master is not grounded. Do not run bus wiring in the same conduit as line voltage wiring.

A network segment is a single shielded wire loop run between several devices (nodes) in a daisy chain configuration. The total segment length should be less than 4000 feet (1220 meters) and the maximum number of nodes on one segment is 127. Nodes are any device connected to the loop and include controllers, repeaters and sensors such as the RH/T Sensor but does not include the EOL terminators. To install more devices, or to increase the network length, repeaters will be required for proper communication. The maximum daisy chain length (segment) depends on transmission speed (baud rate), wire size and number of nodes. If communication is slow or unreliable, it may be necessary to wire two daisy chains to the controller with a repeater for each segment.

Figure 5

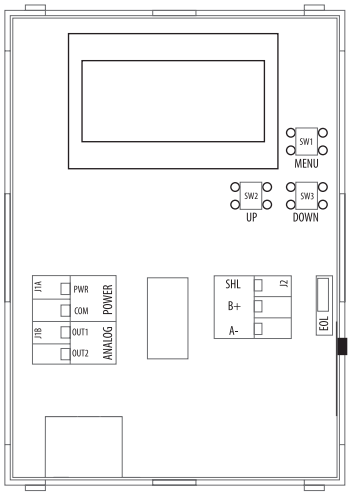


Figure 6

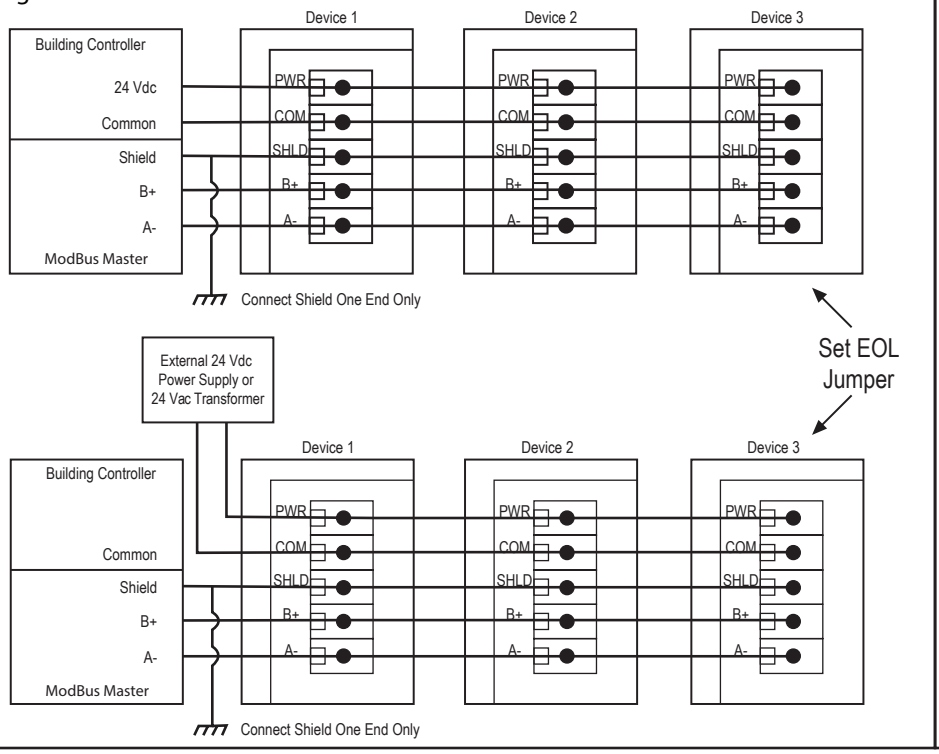


Figure 7

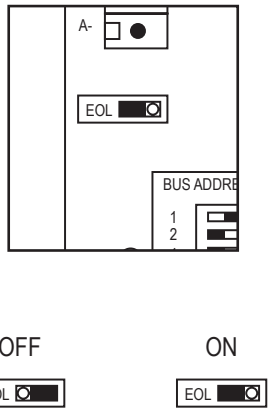



Copyright © Greystone Energy Systems, Inc. All Rights Reserved

## OPERATION

**Start-Up Mode**
When the device is powered on, it will go through a brief start-up mode. The LCD will display a sequence of information depending on the model. At the end of the start-up sequence, normal operation will begin.

**STEP 1** LCD Test
All segments lit for 2 seconds

**STEP 2** Model
Displays the model type (bacnet) for 2 sec.

**STEP 3** Software Version for 2 sec

**STEP 4** Address for 2 sec

**STEP 5** Baud rate for 2 sec

### Normal Mode

In normal operation the device:

- reads the temperature and RH sensors
- calculates values for dewpoint, wet bulb and enthalpy
- updates the LCD values
- updates the BACnet object values
- monitors the menu key for activity

If the <MENU> key is pressed, normal operation is suspended while the menu functions are serviced. The program will automatically exit the menu after a period of inactivity.

## MENU

The device has several parameters that can be configured locally via the User menu using the keypad and LCD. All parameters default to typical values but the installer may want to change some values. In some cases, such as the device network address, the installer MUST change the settings before operation. Any changes made are saved in non-volatile memory and are restored in case of a power loss. Only the menu items relevant to the device model will be shown. The menu can be accessed at any time after the start-up mode and if there is 5 minutes of inactivity the menu will close and normal operation will continue.

**User Menu - Network Device**
To enter the menu, press and release the <MENU> key. This will enter the User menu step 1, pressing the <MENU> key a second time advances to step 2. Each press of the <MENU> key saves the current setting and advances the menu item. The <UP> and <DOWN> keys are used to make changes to program variables by scrolling through the available options. When a value is changed, use the <MENU> key to save it to memory and advance to the next menu item.

<MENU> Press and release to enter the User menu.

**ADDRESS** (default = 1)
Use <UP> or <DOWN> to set the address 0-127. °C and Td blink to indicate the mode.

<MENU>

**BAUD RATE** (default = 9600)
Use <UP> or <DOWN> to select a baud rate of 960 (9600), 192 (19200), 384 (38400), 576 (57600), 768 (76800) or 115 (115200). °F and Tw blink to indicate the mode.

<MENU> Exits the menu and returns to normal operation.

 Copyright © Greystone Energy Systems, Inc. All Rights Reserved 

## DIMENSIONS

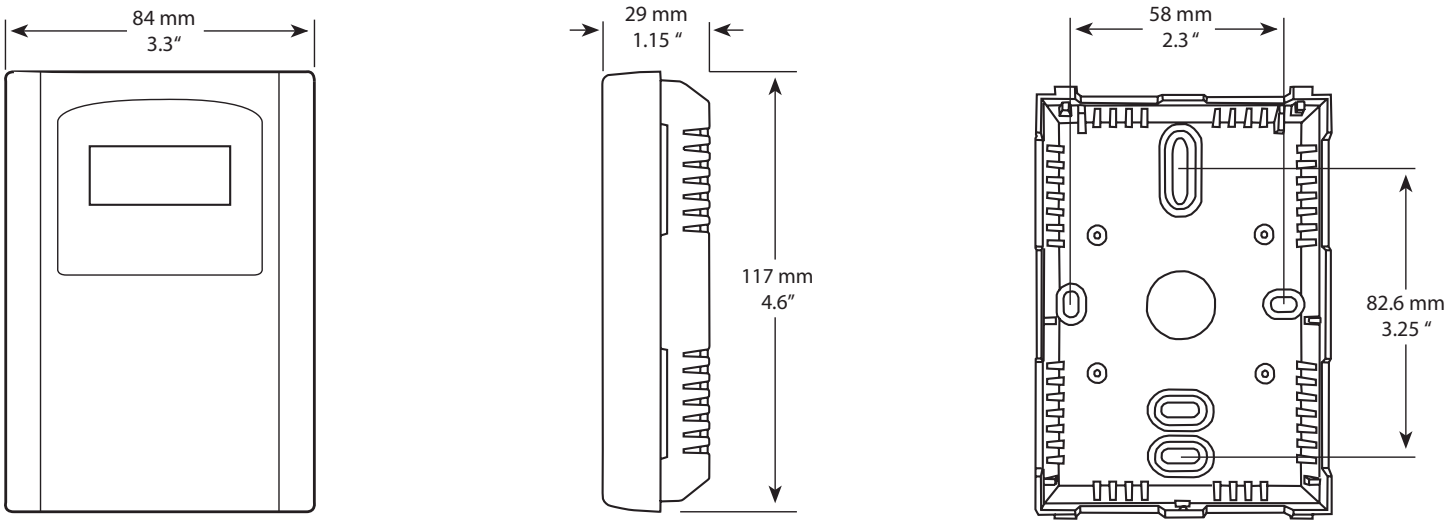


**SENSOR TYPE:**

| | |
|---|---|
| RH Sensor | Thermoset polymer based capacitive |
| Temperature Sensor | NTC Thermistor |

**MEASUREMENT RANGE:**

| | |
|---|---|
| Relative Humidity | 0 - 100 %RH |
| Dry Bulb Temperature | 0 – 50 °C (32 – 122 °F) |

**CALCULATED VALUES:**

| | |
|---|---|
| Dewpoint Temperature | -30 – 50 °C (-22 – 122 °F) |
| Wet Bulb Temperature | -10 – 50 °C (14 – 122 °F) |
| Enthalpy | 0 – 340 kJ/kg (0 – 146 BTU/lb) |

**ACCURACY:**

| | |
|---|---|
| Relative Humidity (RH) | ± 2% RH, 10 – 90 %RH @ 25 °C |
| Dry Bulb Temp.(T) | ± 0.2 °C (± 0.4 °F) / 0 – 50 °C (32 – 122 °F) |
| Dewpoint Temp. (Td) | ± 1.0 °C (± 1.8 °F) @ 40 %RH / 25 °C |
| Wet Bulb Temp.(Tw) | ± 1.0 °C (± 1.8 °F) @ 50 %RH / 25 °C |
| Enthalpy (En) | ± 2 kJ/kg (± 1 BTU/lb) @ 50 %RH / 25 °C |

**INTERFACE:**

| | |
|---|---|
| BACnet Protocol | MS/TP, 2-wire RS-485<br>9600, 19200, 38400, 57600, 76800<br>or 115200 baud 0-127 slave address range |

**SPECIFICATIONS:**

| | |
|---|---|
| Power Supply | 20 – 27 Vdc, 16 – 27 Vac<br>(non-isolated half-wave rectified) |
| Consumption | 50 mA max @ 24 Vdc, 1.5 VA max @ 24 Vac |
| Operating Conditions | 0 – 50 °C (32 – 122 °F),<br>0 – 95 %RH non-condensing |
| Storage Conditions | -20 – 70 °C (-4 – 158 °F),<br>0 – 95 %RH non-condensing |
| Wiring Connections | 14 – 22 AWG terminal block |
| Enclosure | Continental |
| Dimensions | 84W x 117H x 29D mm (3.3W x 4.6H x 1.15D in) |
| Material | White ABS |
| Weight | 105 gm (3.7 oz) |
| Approvals | CE, RoHS |

**LCD DISPLAY VALUES:**

| | |
|---|---|
| Temperature | 0.0 – 50.0 °C (0.5 °C resolution)<br>or 32 – 122 °F (1 °F resolution) |
| Dewpoint | -30.0 – 50.0 °C Td (0.5 °C resolution)<br>or -22 – 122 °F Td (1 °F resolution) |
| Wet Bulb | -10.0 – 50.0 °C Tw (0.5 °C resolution)<br>or 14 – 122 °F Tw (1 °F resolution) |
| Enthalpy | 0 – 340 kJ/kg (1 kJ/kg resolution)<br>or 0 – 146 BTU/lb (1 BTU/lb resolution) |


Copyright © Greystone Energy Systems, Inc. All Rights Reserved

## BACnet

| OBJECT TYPE | DYNAMICALLY CREATABLE | DYNAMICALLY DELETABLE | OBJECT IDENTIFIER | OBJECT NAME |
|---|---|---|---|---|
| Device | No | No | 381001 | DP 001 |
| Analog Input | No | No | AI 1<br>AI 2<br>AI 3<br>AI 4<br>AI 5 | Temperature<br>Relative Humidity<br>Dewpoint Temperature<br>Wet Bulb Temperature<br>Enthalpy |
| Analog Value | No | No | AV 1<br>AV 2<br>AV 3<br>AV 4<br>AV 5 | Temperature Offset<br>RH Offset<br>Atmospheric Pressure<br>Altitude<br>Display Mode |
| Binary Value | No | No | BV 1<br>BV 2 | Temperature Unit<br>Enthalpy Unit |

The BACnet Device object allows configuration of the device. Device object properties are shown below.

| PROPERTY | DEFAULT VALUE | PROPERTY DATA TYPE | ACCESS |
|---|---|---|---|
| Object Identifier | 381001 | BACnetObjectIdentifier(numeric) | Read / Write |
| Object Name | DP 001 | CharacterString (32) | Read / Write |
| Object Type | DEVICE (8) | BACnetObjectType | Read |
| System Statu | OPERATIONAL (0) | BACnetDeviceStatus | Read |
| Vendor Name | Greystone Energy Systems | CharacterString | Read |
| Vendor Identifier | 381 | Unsigned16 | Read |
| Model Name | DP | CharacterString | Read |
| Firmware Revision | 1.2 | CharacterString | Read |
| Application Software Version | V1.0 | CharacterString | Read |
| Location | 150 English Dr, Moncton, NB | CharacterString (32) | Read / Write |
| Description | Greystone Dewpoint Sensor | CharacterString (32) | Read / Write |
| Protocol Version | 1 | Unsigned | Read |
| Protocol Revision | 14 | Unsigned | Read |
| Protocol Services Supported | See description below | BACnetServicesSupported | Read |
| Protocol Object Types Supported | See description below | BACnetObjectTypesSupported | Read |
| Object List | See description below | BACnetArray | Read |
| Maximum APDU Length Accepted | 50, B'0000' | Unsigned | Read |
| Segmentation Supported | NO_SEGMENTATION (3) | BACnetSegmentation | Read |
| APDU Timeout | 6,000 | Unsigned | Read / Write |
| Number of APDU Retries | 3 | Unsigned | Read / Write |
| Max Master | 127 | Unsigned | Read / Write |
| Max Info Frames | 1 | Unsigned | Read |
| Device Address Binding | empty | BACnetAddressBinding | Read |
| Database Revision | 0 | Unsigned | Read |
| Property List | | BACnetArray | Read |

## OBJECT IDENTIFIER

Initial default number is 381001, where 381 is the vendor ID and 001 is the default network MAC address. When the MAC address is initially changed the value is updated and saved. For example, if the MAC address is set to 50 via the menu for startup, then the device instance will be set to 381050. This property is also writable via BACnet. If the Device:Object_Identifier is written to via BACnet then the MAC address is no longer appended to the vendor ID to create this value.

### OBJECT NAME

Initial string is "DP 001" where DP is the device model name and 001 is the default network address. Can be written with a new string of maximum length of 32 characters and the value is saved. The "001" is the MAC address and is automatically changed if the MAC address is changed. Once written to via BACnet, the MAC address no longer gets appended to the value.


Copyright © Greystone Energy Systems, Inc. All Rights Reserved Phone: +1 506 853 3057 Web: www.greystoneenergy.com

| | |
|---|---|
| Protocol Services Supported | readProperty, writeProperty, deviceCommunicationControl, who-Has, who-Is<br>Binary bit string = {00000000 00001001 01000000 00000000 01100000 0} |
| Protocol Object Types Supported | Analog_Input, Analog_Value, Binary_Value, Device<br>Binary bit string = {10100100 10000000 00000000 0000000 00000000 00000000 0000000} |
| Object List | ((Device, Instance 1), (Analog Input, Instance 1), (Analog Input, Instance 2), (Analog Input, Instance 3), (Analog Input, Instance 4), (Analog Input, Instance 5), (Analog Value, Instance 1), (Analog Value, Instance 2), (Analog Value, Instance 3), (Analog Value, Instance 4), (Analog Value, Instance 5), (Binary Value, Instance 1), (Binary Value, Instance 2) |
| APDU Timeout | Value is 6,000. Can be modified from 1 to 10,000. |
| Number Of APDU Retries | Value is 3. Can be modified from 1 to 10. |
| Max Master | Value is 127. Value is saved. Can be modified from 1 to 127. |
| Database Revision | Value is 0 to 255. |

The analog input BACnet objects allow reading of sensor values. Analog input object properties are shown below.

| | |
|---|---|
| **Analog Input Object Temperature** | (Present Value = temperature sensor reading in °F or °C, resolution = 0.1°, range = -30-50 °C or -22-122 °F) |

| PROPERTY | DEFAULT VALUE | PROPERTY DATA TYPE | ACCESS |
|---|---|---|---|
| Object Identifier | AI1 (Analog Input 1) | BACnetObjectIdentifier | Read |
| Object Name | Temperature | CharacterString (32) | Read |
| Object Type | ANALOG_INPUT (0) | BACnetObjectType | Read |
| Present Value | current reading | Real | Read |
| Description | Temperature | CharacterString (32) | Read |
| Device Type | Temperature Sensor | CharacterString (32) | Read |
| Status Flags | {false, false, false, false} (0000) | BACnetStatusFlags | Read |
| Event State | NORMAL (0) | BACnetEventState | Read |
| Reliability | NO_FAULT_DETECTED (0) | BACnetReliability | Read |
| Out of Service | FALSE (0) | Boolean | Read |
| Units | degrees-Celsius (62) or degrees-Fahrenheit (64) | BACnetEngineeringUnits | Read |
| Property List | | BACnetArray | Read |


Copyright © Greystone Energy Systems, Inc. All Rights Reserved Phone: +1 506 853 3057 Web: www.greystoneenergy.com

**Analog Input Object Relative Humidity** (Present Value = RH sensor reading in %RH, resolution is 0.1%, range = 0-100 %RH)

| PROPERTY | DEFAULT VALUE | PROPERTY DATA TYPE | ACCESS |
|---|---|---|---|
| Object Identifier | AI2 (Analog Input 2) | BACnetObjectIdentifier | Read |
| Object Name | Relative Humidity | CharacterString (32) | Read |
| Object Type | ANALOG_INPUT (0) | BACnetObjectType | Read |
| Present Value | current reading | Real | Read |
| Description | Relative Humidity | CharacterString (32) | Read |
| Device Type | RH Sensor | CharacterString (32) | Read |
| Status Flags | {false, false, false, false} (0000) | BACnetStatusFlags | Read |
| Event State | NORMAL (0) | BACnetEventState | Read |
| Reliability | NO_FAULT_DETECTED (0) | BACnetReliability | Read |
| Out of Service | FALSE (0) | Boolean | Read |
| Units | Percent-relative-humidity (29) | BACnetEngineeringUnits | Read |
| Property List | | BACnetArray | Read |

**Analog Input Object Dewpoint Temperature** (Present Value = dewpoint temperature calculation in °F or °C, resolution = 0.1°, range = -30-50 °C or -22-122 °F)

| PROPERTY | DEFAULT VALUE | PROPERTY DATA TYPE | ACCESS |
|---|---|---|---|
| Object Identifier | AI3 (Analog Input 3) | BACnetObjectIdentifier | Read |
| Object Name | Dewpoint Temperature | CharacterString (32) | Read |
| Object Type | ANALOG_INPUT (0) | BACnetObjectType | Read |
| Present Value | current reading | Real | Read |
| Description | Dewpoint Temperature | CharacterString (32) | Read |
| Device Type | Dewpoint Temperature Sensor | CharacterString (32) | Read |
| Status Flags | {false, false, false, false} (0000) | BACnetStatusFlags | Read |
| Event State | NORMAL (0) | BACnetEventState | Read |
| Reliability | NO_FAULT_DETECTED (0) | BACnetReliability | Read |
| Out of Service | FALSE (0) | Boolean | Read |
| Units | degrees-Celsius (62) or degrees-Fahrenheit (64) | BACnetEngineeringUnits | Read |
| Property List | | BACnetArray | Read |

**Analog Input Object Wet Bulb Temperature** (Present Value = wet bulb temperature calculation in °F or °C, resolution = 0.1°, range = -30-50 °C or -22-122 °F)

| PROPERTY | DEFAULT VALUE | PROPERTY DATA TYPE | ACCESS |
|---|---|---|---|
| Object Identifier | AI4 (Analog Input 4) | BACnetObjectIdentifier | Read |
| Object Name | Wet Bulb Temperature | CharacterString (32) | Read |
| Object Type | ANALOG_INPUT (0) | BACnetObjectType | Read |
| Present Value | current reading | Real | Read |
| Description | Wet Bulb Temperature | CharacterString (32) | Read |
| Device Type | Wet Bulb Temperature Sensor | CharacterString (32) | Read |
| Status Flags | {false, false, false, false} (0000) | BACnetStatusFlags | Read |
| Event State | NORMAL (0) | BACnetEventState | Read |
| Reliability | NO_FAULT_DETECTED (0) | BACnetReliability | Read |
| Out of Service | FALSE (0) | Boolean | Read |
| Units | degrees-Celsius (62) or degrees-Fahrenheit (64) | BACnetEngineeringUnits | Read |
| Property List | | BACnetArray | Read |


Copyright © Greystone Energy Systems, Inc. All Rights Reserved Phone: +1 506 853 3057 Web: www.greystoneenergy.com

**Analog Input Object Enthalpy** (Present Value = enthalpy calculation in J/kg or BTU/lb, resolution = 1, range = 0-340 kJ/k or 0-146 BTU/lb)

| PROPERTY | DEFAULT VALUE | PROPERTY DATA TYPE | ACCESS |
|---|---|---|---|
| Object Identifier | AI5 (Analog Input 5) | BACnetObjectIdentifier | Read |
| Object Name | Enthalpy | CharacterString (32) | Read |
| Object Type | ANALOG_INPUT (0) | BACnetObjectType | Read |
| Present Value | current reading | Real | Read |
| Description | Enthalpy | CharacterString (32) | Read |
| Device Type | Enthalpy Sensor | CharacterString (32) | Read |
| Status Flags | {false, false, false, false} (0000) | BACnetStatusFlags | Read |
| Event State | NORMAL (0) | BACnetEventState | Read |
| Reliability | NO_FAULT_DETECTED (0) | BACnetReliability | Read |
| Out of Service | FALSE (0) | Boolean | Read |
| Units | kilojoules-per-kilogram-dry-air (149) or btus-per-pound-dry-air (24) | BACnetEngineeringUnits | Read |
| Property List | | BACnetArray | Read |

The analog value BACnet objects allow sensor calibration and parameter selection. Analog value object properties are shown below.

**Analog Value Object Temperature Offset** (Present Value defaults to 0 for no offset. Can be set from –10 to +10 D°F or -5.0 to +5.0 D°C) (Units depend on the device units, either °C or °F), (°C resolution = 0.5, °F resolution = 1)

| PROPERTY | DEFAULT VALUE | PROPERTY DATA TYPE | ACCESS |
|---|---|---|---|
| Object Identifier | AV1 (Analog Value 1) | BACnetObjectIdentifier | Read |
| Object Name | Temperature Offset | CharacterString (32) | Read |
| Object Type | ANALOG_VALUE (2) | BACnetObjectType | Read |
| Present Value | 0 | Real | Read / Write |
| Description | Temperature Offset | CharacterString (32) | Read |
| Status Flags | {false, false, false, false} (0000) | BACnetStatusFlags | Read |
| Event State | NORMAL (0) | BACnetEventState | Read |
| Out of Service | FALSE (0) | Boolean | Read |
| Units | delta-degrees-Fahrenheit (120) or D°C (121) | BACnetEngineeringUnits | Read |
| Property List | | BACnetArray | Read |

**Analog Value Object RH Offset** (Present Value defaults to 0 for no offset. Can be set from –10 to +10 %RH, resolution = 1)

| PROPERTY | DEFAULT VALUE | PROPERTY DATA TYPE | ACCESS |
|---|---|---|---|
| Object Identifier | AV2 (Analog Value 2) | BACnetObjectIdentifier | Read |
| Object Name | RH Offset | CharacterString (32) | Read |
| Object Type | ANALOG_VALUE (2) | BACnetObjectType | Read |
| Present Value | 0 | Real | Read / Write |
| Description | RH Offset | CharacterString (32) | Read |
| Status Flags | {false, false, false, false} (0000) | BACnetStatusFlags | Read |
| Event State | NORMAL (0) | BACnetEventState | Read |
| Out of Service | FALSE (0) | Boolean | Read |
| Units | percent-relative-humidity (29) | BACnetEngineeringUnits | Read |
| Property List | | BACnetArray | Read |


Copyright © Greystone Energy Systems, Inc. All Rights Reserved Phone: +1 506 853 3057 Web: www.greystoneenergy.com

**Analog Value Object Atmospheric Pressure** (Present Value = 1013 hectopascals. Can be set from 812 to 1013 hPa, resolution = 1 hPa)
(Atmospheric pressure is directly linked with Altitude)

| Property | Default Value | Property Data Type | Access |
|---|---|---|---|
| Object Identifier | AV3 (Analog Value 3) | BACnetObjectIdentifier | Read |
| Object Name | Atmospheric Pressure | CharacterString (32) | Read |
| Object Type | ANALOG_VALUE (2) | BACnetObjectType | Read |
| Present Value | 1013 | Real | Read / Write |
| Description | Atmospheric Pressure | CharacterString (32) | Read |
| Status Flags | {false, false, false, false} (0000) | BACnetStatusFlags | Read |
| Event State | NORMAL (0) | BACnetEventState | Read |
| Out of Service | FALSE (0) | Boolean | Read |
| Units | hectopascals (hPa) (133) | BACnetEngineeringUnits | Read |
| Property List | | BACnetArray | Read |

**Analog Value Object Altitude** (Present Value defaults to 0 feet. Can be set from 0 to 6000 feet, resolution = 1 ft)
(Altitude is directly linked with Atmospheric pressure)

| Property | Default Value | Property Data Type | Access |
|---|---|---|---|
| Object Identifier | AV4 (Analog Value 4) | BACnetObjectIdentifier | Read |
| Object Name | Altitude | CharacterString (32) | Read |
| Object Type | ANALOG_VALUE (2) | BACnetObjectType | Read |
| Present Value | 0 | Real | Read / Write |
| Description | Altitude | CharacterString (32) | Read |
| Status Flags | {false, false, false, false} (0000) | BACnetStatusFlags | Read |
| Event State | NORMAL (0) | BACnetEventState | Read |
| Out of Service | FALSE (0) | Boolean | Read |
| Units | feet (33) | BACnetEngineeringUnits | Read |
| Property List | | BACnetArray | Read |

**Analog Value Object Display Mode** (Present Value defaults to 1. Can be changed to control what is displayed on the LCD)

| Property | Default Value | Property Data Type | Access |
|---|---|---|---|
| Object Identifier | AV5 (Analog Value 5) | BACnetObjectIdentifier | Read |
| Object Name | Display Mode | CharacterString (32) | Read |
| Object Type | ANALOG_VALUE (2) | BACnetObjectType | Read |
| Present Value | 0 | Real | Read / Write |
| Description | Display Mode | CharacterString (32) | Read |
| Status Flags | {false, false, false, false} (0000) | BACnetStatusFlags | Read |
| Event State | NORMAL (0) | BACnetEventState | Read |
| Out of Service | FALSE (0) | Boolean | Read |
| Units | no-units (95) | BACnetEngineeringUnits | Read |
| Property List | | BACnetArray | Read |

* Notes This object controls the information that is displayed on the LCD in the normal operating mode.
The available settings are: 0 = no display (menu will still display if key pressed)
1 = Temperature
2 = Dewpoint temperature
3 = Wet Bulb temperature
4 = Enthalpy
5 = Temperature plus dewpoint toggle every 5 seconds
6 = Temperature plus wet bulb toggle
7 = Temperature plus enthalpy toggle
8 = Dewpoint plus wet bulb toggle
9 = Dewpoint plus enthalpy toggle
10 = Wet bulb plus enthalpy toggle

 Copyright © Greystone Energy Systems, Inc. All Rights Reserved 

The binary value BACnet object allows configuration of the device. Binary value object properties are shown below.

**Binary Value Object Temperature Units** (Present Value defaults to 0 (INACTIVE) for Celsius. Can be set to 1 (ACTIVE) for Fahrenheit)

| Property | Default Value | Property Data Type | Access |
|---|---|---|---|
| Object Identifier | BV1 (Binary Value 1) | BACnetObjectIdentifier | Read |
| Object Name | Temperature Units | CharacterString (32) | Read |
| Object Type | BINARY_VALUE (5) | BACnetObjectType | Read |
| Present Value | INACTIVE (0) | BACnetBinaryPV | Read / Write |
| Description | Celsius (0) or Fahrenheit (1) | CharacterString (32) | Read |
| Status Flags | {false, false, false, false} (0000) | BACnetStatusFlags | Read |
| Event State | NORMAL (0) | BACnetEventState | Read |
| Reliability | NO_FAULT_DETECTED (0) | BACnetReliability | Read |
| Out of Service | FALSE (0) | Boolean | Read |
| Property List | | BACnetArray | Read |

**Binary Value Object Enthalpy Units** (Present Value defaults to 0 (INACTIVE) for kJ/kg. Can be set to 1 (ACTIVE) for BTU/lb)

| Binary Value Object | (Present Value defaults to 0 (INACTIVE) for kJ/kg. Can be set to 1 (ACTIVE) for BTU/lb) | Property Data Type | Access |
|---|---|---|---|
| Enthalpy Units | BV2 (Binary Value 2) | BACnetObjectIdentifier | Read |
| | Enthalpy Units | CharacterString (32) | Read |
| Object Type | BINARY_VALUE (5) | BACnetObjectType | Read |
| Present Value | INACTIVE (0) | BACnetBinaryPV | Read / Write |
| Description | kJ/kg (0) or BTU/lb (1) | CharacterString (32) | Read |
| Status Flags | {false, false, false, false} (0000) | BACnetStatusFlags | Read |
| Event State | NORMAL (0) | BACnetEventState | Read |
| Reliability | NO_FAULT_DETECTED (0) | BACnetReliability | Read |
| Out of Service | FALSE (0) | Boolean | Read |
| Property List | | BACnetArray | Read |


Copyright © Greystone Energy Systems, Inc. All Rights Reserved

**BACnet Protocol Implementation Conformance Statement (PICS)**

**Date :** Feb 21, 2017
**Vendor Name :** Greystone Energy Systems
**Product Name :** Dewpoint Sensor - Room
**Product Model Number :** DPRCB
**Application Software Version :** 1.0
**Firmware Revision :** 1.4
**BACnet Protocol Revision :** 14

**Product Description :** The Greystone Dewpoint Sensors are smart duct or OSA sensors with native BACnet MS/TP protocol for network communication. They measure room temperature, dewpoint temperature, wet bulb temperature, RH and enthalpy levels and reports values back to a building automation system (BAS). The device features an LCD to display measured values and for setup.

**BACnet Standardized Device Profile (Annex L) :** BACnet Application Specific Controller (B-ASC)

**BACnet Interoperability Building Blocks Supported (Annex K) :** DS-RP-B, DS-WP-B,
DM-DDB-B, DM-DOB-B
DM-DCC-B

**Segmentation Capability :** Not supported

**Standard Object Types Supported :**

| Object Type | Dynamically Creatable | Dynamically Deletable | Optional Properties Supported | Writable Properties |
|---|---|---|---|---|
| Device | No | No | Location, Description, Max_Master, Max_Info_Frames | Object_Identifier, Object_Name, Location, Description, APDU_Timeout, Max_Master, Number_Of_APDU_Retries |
| Analog Input | No | No | Description, Reliability, Device_Type | |
| Analog Value | No | No | Description | Present_Value |
| Binary Value | No | No | Description, Reliability | Present_Value |

**Data Link Layer Options :** MS/TP master (Clause 9),
Baud rates : 9600, 19200, 38400, 57600, 76800, 115200

**Device Address Binding :** Not supported

**Networking Options :** None

**Character Set Supported :** ISO 10646 (UTF-8)

PRINTED IN CANADA


Copyright © Greystone Energy Systems, Inc. All Rights Reserved