DUAL CHANNEL REMOTE SPOT WATER DETECTOR

WLD2R Series - Installation Instructions

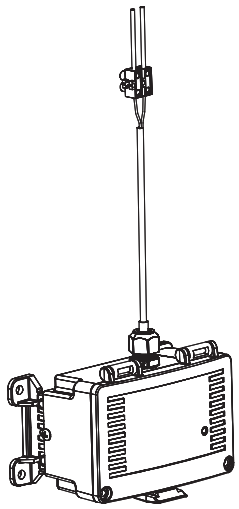

INTRODUCTION

The dual channel remote spot water detector is used to detect the presence of water or conductive liquids. It features two sensing points, each with an independent relay output and is designed to signal alarms if one or more of three conditions are met: water is detected, power is lost to the unit, or if there is an internal failure.

The dual channel remote spot water detector features remote spot detection on channel 1 with remote sensing probes and cable that is available in various lengths. On Channel 2, can be selected as either a secondary remote spot or with conductivity cable which is available in several lengths.

It is housed in an IP65 rated enclosure with height adjustable mounting legs. A tri-color LED provides visual status indication.

BEFORE INSTALLATION

- Read these instructions carefully before installing and commissioning the water detector. Failure to follow these instructions may result in product damage.
- Do not use in an explosive or hazardous environment, with combustible or flammable gases, as a safety or emergency stop device or in any other application where failure of the product could result in personal injury.
- **Take electrostatic discharge precautions during installation and do not exceed the device ratings.**

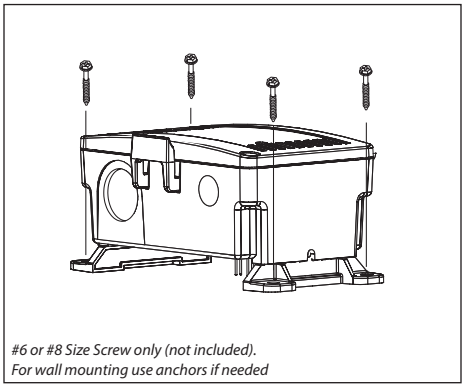

#6 or #8 Size Screw only (not included).
For wall mounting use anchors if needed

1 Secure by applying a silicone adhesive to the mounting feet and placing the sensor in the area to be protected. For more permanent installations, fasten the sensor using the holes provided in the mounting feet.

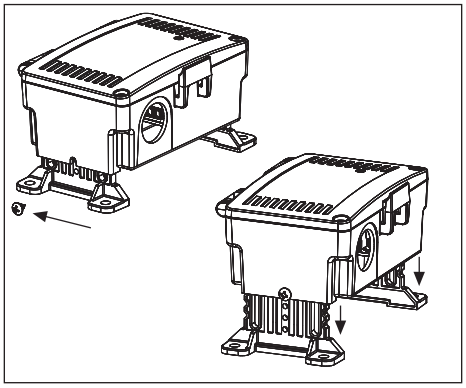

2 The legs have five pre-set heights set by the holes in the leg. To adjust leg height, remove the screws. Pull/push the legs to the height desired, and re-insert screws and tighten.

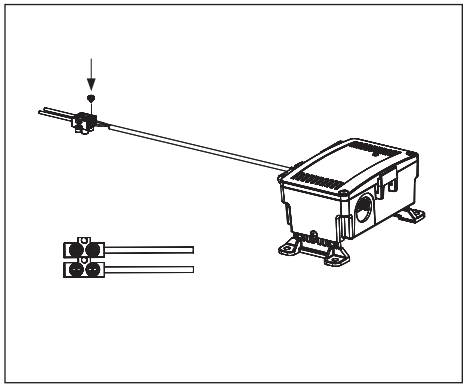

3 Route the cable to desired location. Mount the terminal block using a screw or adhesive. Make sure sensing probes do not contact any surface. Repeat for Channel 2 if Remote Spot is selected.

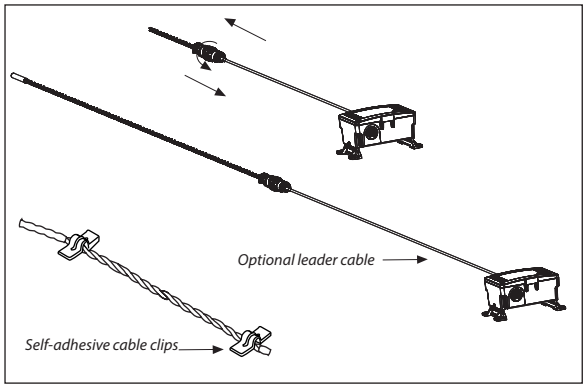

4 If Channel 2 is Conductivity Cable, Once laid in place, secure using the self-adhesive cable clips provided. For best results adhere clips at each end of the cable first. Clips are provided to secure cable approximately every 1.5 m (5'). NOTE: If the device was ordered with a leader cable, the conductivity cable can be disconnected to assist in installation. To remove, twist connector counter-clockwise and pull apart.

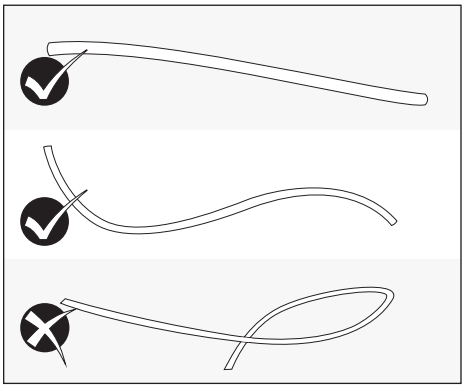

5 The cable may be laid in a straight line or in a serpentine configuration. Be careful not to kink cable.

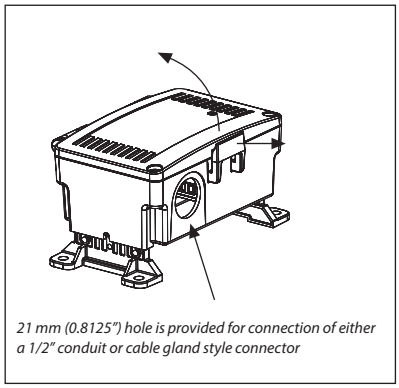

21 mm (0.8125") hole is provided for connection of either a 1/2" conduit or cable gland style connector

6 Open the cover by pulling slightly on the latch on the enclosure and at the same time pulling up on the cover.

 Copyright © Greystone Energy Systems, Inc. All Rights Reserved Phone: +1 506 853 3057 Web: www.greystoneenergy.com

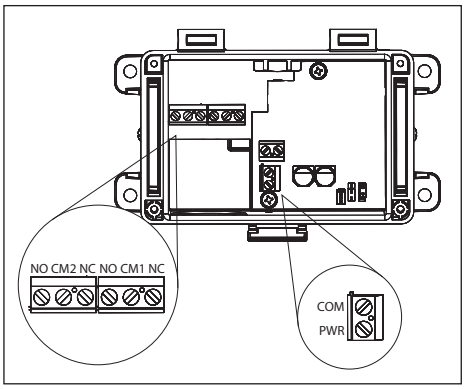

7 Make all connections in accordance with national and local codes. Use 14-22 AWG shielded wire and do not locate the device wires in the same conduit with wiring used to supply inductive loads such as motors. The device is reverse voltage protected and will not operate if connected backwards.

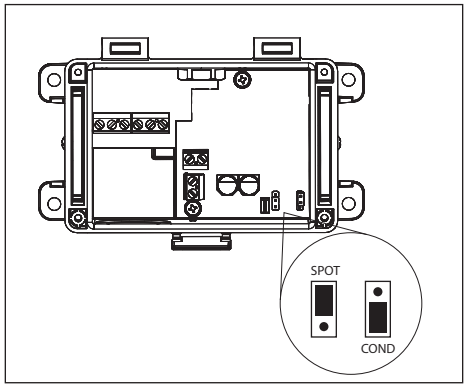

8 All jumpers are factory set. Improper positioning will cause device to be in constant alarm state.
Spot = SPOT position
Remote Spot = SPOT position
Conductivity Cable = COND position

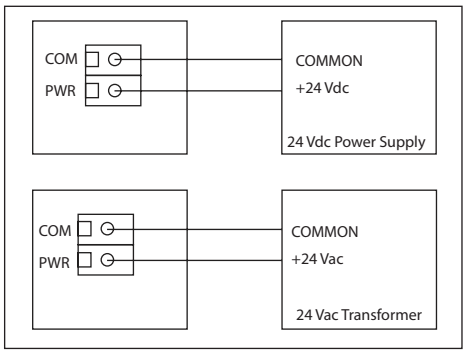

9 To prevent electrical shock or equipmentndamage make all connections before applying power. Connect 24 Vac/Vdc to PWR & COM terminals.
NOTE: Use caution when wiring multiple devices or when grounding the secondary of a transformer to ensure that the circuit ground point is the same on all devices and the controller.

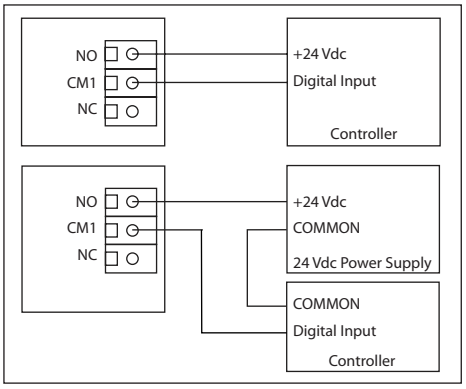

10 Do not exceed the device contact ratings. The relays are Form C type with both a normally open (NO) and a normally closed (NC) contact. Relay terminals are designated NO, CM* and NC.
NOTE: Each relay output is independent and isolated from the other and the relays COMs are not connected to the device COM.

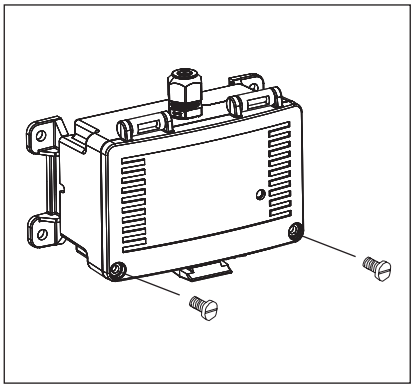

11 Use the provided security screws to secure the cover.

OPERATION

When the sensor is powered on the controller will monitor the liquid detection channels. If a conductive liquid comes in contact with the sensor pins or conductive cable the controller will trigger the relays to indicate liquid is present.
The relays are fail-safe, meaning when power is applied to device the relay is powered. If power is lost to device the relay will deenergize signaling a fault to the system.

Channel 1: Relay Activates on water detection.
Channel 2: Remote Spot: Relay activates on water detection.
Channel 2: Conductivity: Relay activates on water detection or trouble.

LED: Green = No water detected
Yellow Solid = Channel 1 Water Detection
Red Solid = Channel 2 Water Detection
Red Flash = Channel 2 Trouble (Conductivity Cable Only)

DIMENSIONS

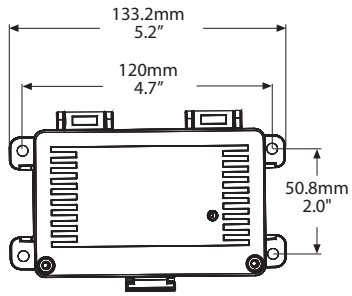

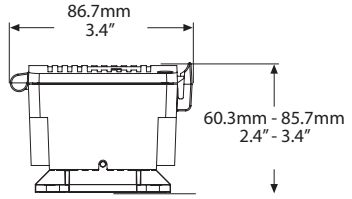

SPECIFICATIONS

VISUAL INDICATION	Tri-color LED - Green, Yellow, Red
OPERATING TEMPERATURE	0 to 60°C (32 to 140°F)
DIMENSIONS	133.2mm L x 86.7mm W x 60.3-85.7mm H (5.2" x 3.4" x 2.4"- 3.4")
PROTECTION CLASS	III
POWER SOURCE UL	12-27 Vac/Vdc, 50/60 Hz, SELV, Class 2
CONSUMPTION	125 mA max @ 24 Vac
OUTPUTS	2A, 30 Vac/Vdc, 6000 cycles, resistive, 60°C, SELV Class 2 1 or 2 Form C relay alarms (NO/NC)
EU CONFORMITY	CE
UL MODEL#	WH2O22RR, WH2O22RC
CERTIFICATION	UL 60730 & CSA E60730
UL 2043 / CSA / ULC S142 COMPLIANT:	Suitable for Use In Air Handling Spaces in Accordance with Section 300.22, (C) of the National Electrical Code
ENCLOSURE	Type 4X and IP65, ABS w/ hinged & gasket cover
PURPOSE OF CONTROL	Operating Control, Water Detector
TYPE OF ACTION	Type 1. C Action
IMPULSE VOLTAGE	330V
POLLUTION DEGREE	3
COUNTRY OF ORIGIN	Canada

PRINTED IN CANADA

 Copyright © Greystone Energy Systems, Inc. All Rights Reserved

SENSING CABLE CARE AND MAINTENANCE

This guide outlines sensing cable care, maintenance, and troubleshooting.

Cleaning the Sensing Cable:

While the sensing cable is engineered to resist contamination from dirt and dust, periodic cable maintenance is recommended. This keeps your cable free of foreign particles and ensures the fastest, most reliable leak detection response.

There are two preferred ways to clean the sensing cable:

Clean the Cable with Isopropyl Alcohol

Cleaning the cable with alcohol allows you to clean the sensing cable without completely removing it from the installed location. You'll remove the section of cable you wish to clean from its J-clips, wipe it down, and reinstall the cable. This method will clean most contaminants from the cable and will sufficiently clean the cable in many cases.

1: Obtain a dye-free heavy cloth rag and a bottle of isopropyl alcohol.
2: Remove the first section of cable to be cleaned from its j-clips.
3: Soak the rag with alcohol.
4: Wrap the rag around the cable and squeeze firmly while pulling the rag down the length of the cable.
5: Flip the rag every several feet. Re-saturate the rag with alcohol as required.
6: Once you've reached the end of the first section of cable, place it back in the J-clips and proceed to the next section.
7: Replace the rag if it becomes too dirty.

Clean the Cable with Warm Soapy Water

If you still notice problems with your sensing cable after you've cleaned it with isopropyl alcohol, or if you believe the cable is so dirty that it requires a more intense scrubbing, clean the cable with warm soapy water. This process requires you to completely remove the cable from the installed location, submerge it in a soap and water solution, scrub it with a brush, and hang it to dry.

1: Remove the sensing cable from its installed location. To help with the reinstallation process, label the sections of cable or note their location.
2: Gather Dawn dish soap, a large bucket or plastic bin, warm water, soft-bristled scrub brushes, and clean rags.
3: Locate an area inside or outside your facility that will not be affected by water.
4: Add Dawn dish soap to a bucket of water. Use about 1 cup of Dawn to 1 gallon of warm water. To determine if your solution is concentrated enough, place your finger, and thumb in the water and rub them together. You should feel a slick/slimy residue. If you do not feel a residue, add more detergent to the water and gently mix to distribute the soap.
5: Submerge a section of the cable in the water.
6: Using a scrub brush or rag, scrub along the surface of the cable with firm pressure. Scrub all sides of the cable.
7: Remove the section of the cable from the soapy solution and rinse it in a bucket of clean, fresh water.
8: Ensure there are no oily deposits along the length of the cable. If the cable does not appear clean, repeat steps 6 and 7.
9: Hang up the cable to dry. Try to point the connectors down so water cannot pool inside the connectors. The drying process may take 6 to 48 hours, depending on the room conditions.
10: Once the cable is completely dry, reinstall it in its original location.

 Copyright © Greystone Energy Systems, Inc. All Rights Reserved